Factors controlling the phases and styles of extension in the northern Rio Grande rift

Paul Morgan and Matthew P. Golombek

1984, pp. 13-19. https://doi.org/10.56577/FFC-35.13

in:

Rio Grande Rift (Northern New Mexico), Baldridge, W. S.; Dickerson, P. W.; Riecker, R. E.; Zidek, J.; [eds.], New Mexico Geological Society 35th Annual Fall Field Conference Guidebook, 379 p. https://doi.org/10.56577/FFC-35

This page is intentionally left blank to maintain order of facing pages.

FACTORS CONTROLLING THE PHASES AND STYLES OF EXTENSION IN THE NORTHERN RIO GRANDE RIFT

PAUL MORGAN[1] and MATTHEW P. GOLOMBEK[2]
[1]Department of Geosciences, Purdue University, West Lafayette, Indiana 47907; [2]M.S. 183-501, Jet Propulsion Laboratory, 4800 Oak Grove Drive, Pasadena, California 91109

INTRODUCTION

The Rio Grande rift is the latest development in a complex series of tectonic and magmatic events in Colorado and New Mexico that began in the Late Cretaceous with Laramide orogeny and have continued to the present. Numerous authors have documented all or part of this complex geologic history in northern New Mexico (e.g., Baldridge and others, 1980; Baltz, 1978; Chapin, 1979; Chapin and Cather, 1981; Golombek and others, 1983; Lipman, 1981; Stearns, 1953a). Following a generalization and simplification of this series of events in south-central and southwestern New Mexico by Seager and others (1984) and Morgan and Seager (1983 and unpubl.), we identify four basic Cenozoic tectonic—geologic events in northern New Mexico (Fig. 1): (1) Laramide (Cretaceous—Eocene) compressional deformation, essentially amagmatic, producing uplifts and compressional and strike—slip-related sedimentary basins (Baltz, 1978; Chapin and Cather, 1981; Stearns, I 953a); (2) major Oligocene—early Miocene volcanism (Bachman and Mehnert, 1978; Baldridge and others, 1980; Kautz and others, 1981; Lipman, 1981; Lipman and Mehnert, 1979; Osburn and Chapin, 1983; Stearns, 1953a, b; Tweto, 1979); (3) early-phase (late Oligocene—early Miocene) extension with locally large strain and formation of broad basins (Baldridge and others, 1981; Baltz, 1978; Chamberlin, 1983; Lipman, 1981; Manley and Mehnert, 1981; Rhoades and Callender, 1983; Stearns, 1953a); and, following a middle Miocene lull in volcanic activity (Chapin and Seager, 1975), (4) late-phase (approximately 13 m.y. to present with most extension from 12 to 5 m.y.), extensional block faulting with associated volcanism (Golombek and others, 1983; Gardner, 1983). Major volcanic and modern tectonic activities continue to the present (Aubele, 1979; Bachman and Mehnert, 1978; Doell and others, 1968; Kudo, 1982; Lipman and Mehnert, 1979). Recently, Morgan and Seager (1983 and unpubl.) used the tectonic and magmatic history of south-central and southwestern New Mexico to study the evolution of geotherm and changing styles of extensional tectonism in the southern Rio Grande rift. In the present contribution we attempt to identify the factors which controlled the different tectonic styles of the two phases of Cenozoic extension in northern New Mexico.

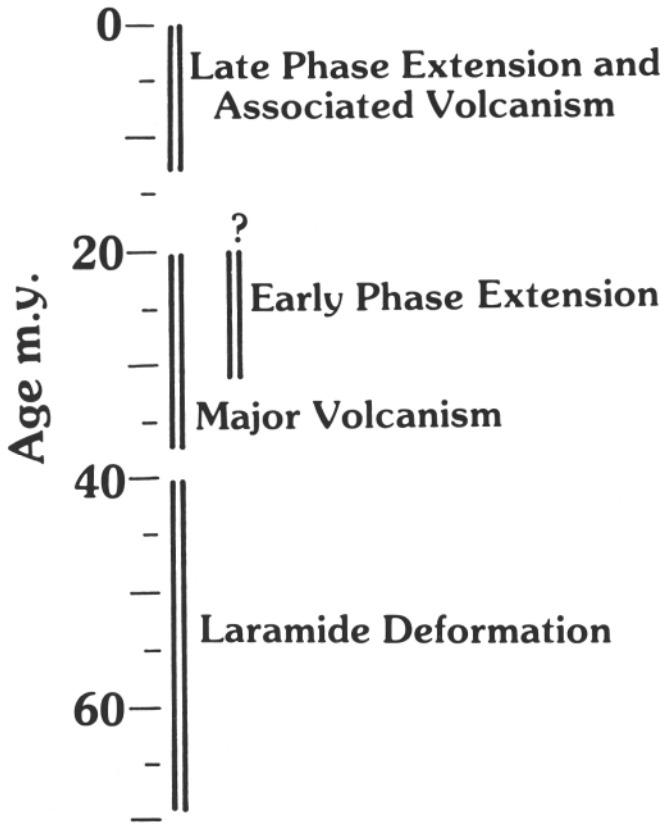

FIGURE 1. Major Cenozoic geologic–tectonic events in northern New Mexico. Bars indicate the approximate duration of each event.

EARLY EXTENSION AND BROAD BASINS

The early (late Oligocene—early Miocene) phase of extension in the area of the Rio Grande rift started during the later stages of major Oligocene—early Miocene volcanism and was similar in timing, orientation, and style to an early phase of extension in the Basin and Range province (e.g., Zoback and others, 1981; Eaton, 1982). The axis of extension during this phase was oriented southwest to west—southwest, oblique to the extension axes of the modern Rio Grande rift and Basin and Range. Age data suggest that extension was not synchronous in all areas, but commonly was temporally and spatially associated with major magmatic events (e.g., Lemitar Mountains, 31-28 m.y., Chamberlin, 1983; Questa, 23 m.y., Lipman, 1981). Palinspastic reconstructions suggest that very large strains (greater than 100%) were locally associated with this extension (e.g., Chamberlin, 1983; Lipman, 1981). Unfortunately, in many areas this event is masked by the later extension event, and although it has only been well documented in a few areas, it is likely that extension associated with this event was more widespread.

In some areas relatively broad and shallow basins were formed by the early extension event. A good example is the Popotosa Basin in the Socorro—Magdalena area (Chapin and Seager, 1975; Chamberlin, 1983). Another example may be the area now occupied by the Espafiola Basin, where several authors have documented the development of a broad basin around 25 m.y. ago (e.g., Baldridge and others, 1980; Baltz, 1978; Manley and Mehnert, 1981; Stearns, 1953a), although it cannot be demonstrated at present that extension was directly responsible for the formation of this latter basin. By 26 m.y. ago, shallow basins had formed along the trend of the Rio Grande rift from southern New Mexico to the Wyoming border (C. E. Chapin, written comm. 1984).

We suggest that most, if not all, of these basins were formed by extension (see below and McKenzie, 1978), primarily on the evidence that formation of these basins was roughly contemporaneous with early-phase extension. If this hypothesis is correct, it is possible that many of the basins have not been identified as extensional either because the style of faulting associated with large strains is only just being recognized in some areas of the rift (e.g., Rhoades and Callender, 1983), or because faulting is not exposed. Basins formed by high-strain extension of the lithosphere have three components of subsidence: (1) a tectonic component caused by thinning of the buoyant crust during extension; (2) a thermal component caused by cooling, thickening, and contraction of the lithosphere after convective upwarp of the geotherm during extension; and (3) a loading component caused by sediments infilling the

depression caused by (1) and (2) (McKenzie, 1978). It is only where pre-basin basement or early basin sediments faulted during extension are exposed by uplift that the extensional origins of the basins may be manifest. Late basin sediments, deposited during the thermal phase of subsidence, are often more laterally extensive than early basin sediments due to flexural widening of the basin with loading, and do not record the extensional origin of the basin.

Thus, while we recognize that many of the late Oligocene—early Miocene broad basins may have formed by processes unrelated to extension, we consider it possible that they may be dominantly extensional in origin, but that features diagnostic of this extension have not been identified. For our discussion of factors controlling extensional style, the percentage of the broad basins formed by high-strain extension is unimportant, although this percentage is a measure of the regional significance of early-phase extension.

LATE EXTENSION AND NARROW GRABENS

The second major phase of Cenozoic extension was responsible for the formation of the modern Rio Grande rift, and corresponds in many respects to Basin and Range extension (e.g., Zoback and others, 1981; Eaton, 1982; Golombek and others, 1983). The extension axis during this event was oriented east—west to east—southeast, and both the local and total strain were much smaller than in the earlier event. Estimates of extension for central and northern New Mexico are of the order of 10 km, decreasing to the north (Brocher, 1981; Cordell, 1982; Golombek, 1981; Golombek and others, 1983; Woodward, 1977), which suggests strains of about 10%. In many areas there is no significant association of volcanism with extension, in fact most volcanism following the middle Miocene lull has occurred in the waning phases of tectonic activity (5 m.y. to present; e.g., Baldridge and others, 1980). Although there is some debate as to the form of the faults at depth (e.g., Brown and others, 1980; Jurdy and Brocher, 1980; Brocher, 1981; Cape and others, 1983), there is little doubt that the prevailing form of faulting during the late extension event is block faulting, with the vertical component dominant.

Late Miocene—Pliocene extension in the Rio Grande rift formed relatively narrow and deep, elongate fault-bounded basins in contrast to the broad, relatively shallow basins formed contemporaneously with late Oligocene—early Miocene extension. These basins in north-central New Mexico are commonly asymmetric grabens (e.g., Baltz, 1978), a characteristic of many continental rifts (e.g., Ramberg and Morgan, 1984). Although the ages of rift faulting cannot be tightly constrained in many areas, the block-faulted style of the rift suggests that most of the Neogene faults with major vertical displacement were formed during the second extension event. Vertical displacement of the Precambrian surface between the Albuquerque—Belen Basin and the northern part of the Sandia uplift could be of the order of 6.4 km (Kelley, 1977, p. 42; Baltz, 1978), and the thickness of Neogene fill in the eastern side of the Albuquerque Basin exceeds 2 km (e.g., Birch, 1982). Major vertical displacements (greater than 1 km) associated with late-phase extension are also indicated for other basins of the northern Rio Grande rift. Thus, the late Miocene—Pliocene extension in the Rio Grande rift can be characterized as a minor extension event with major vertical movements, in strong contrast to the late Oligocene—early Miocene event with major extension and minor vertical movements.

EXTENSION AND BASIN FORMATION

We seek to understand the factors which caused the two extension events in the area of the Rio Grande rift to extend the same upper crust in two contrasting tectonic styles. We consider two hypothetical extensional mechanisms of extensional basin formation which are illustrated in Figure 2. In the first mechanism (Fig. 2a) a section of crust is assumed to extend plastically with an increase in length from x to x'. An extension factor B is given by B = x'/x. If the crust is incompressible and no mass is added or lost during extension, the extension will be accompanied by a uniform decrease in crustal thickness from L to L', and it is easily shown that L/L' = B. Subsidence of the extended crust will occur because the crust is thinned during extension. Assuming all crustal columns to be isostatically compensated, and ignoring any density variations in the mantle, it can be shown that the downwarp, t, is given by

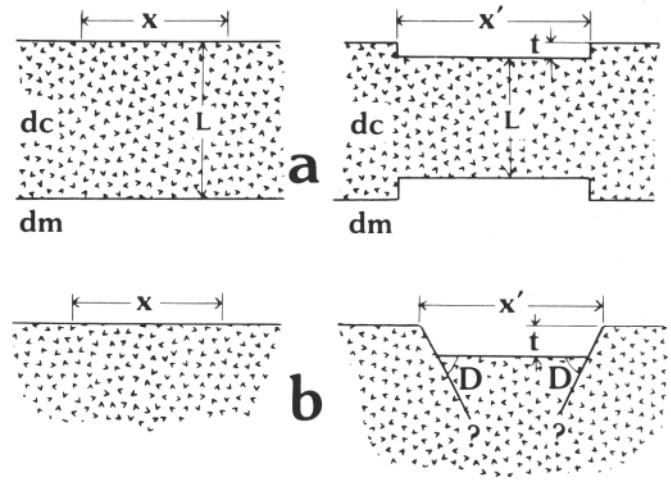

FIGURE 2. Models of unextended (left) and extended (right) crust. **a,** Plastic crustal extension with subsidence resulting from isostatic compensation of crustal thinning. **b,** Brittle fault-block extension with relative subsidence controlled completely by movement on planar normal faults which penetrate to an unspecified depth in the crust. Not to scale. Symbols are explained in the text.

$$t = (L—L')(dm—dc)/dm$$
$$= L(1\text{-}1/B)(dm—dc)/dm$$

where dm and dc are the mean densities of the uppermost mantle and crust, respectively (see McKenzie, 1978, for a more complete treatment of this problem). This mechanism is relatively inefficient at producing subsidence: Assuming crustal and mantle densities of 2.8 and 3.25 Mg m^{-3}, respectively, and an extended crustal thickness of 40 km, 10% extension produces only 500 m downwarp; for 50 and 100% extension the downwarp increases to 1.8 km and 2.8 km, respectively. Thinning and subsidence may be reduced by the addition of magmas to the crust during extension (e.g., Lachenbruch and Sass, 1978). We suggest that the style of late Oligocene—early Miocene extension in the area of the Rio Grande rift, with large strains producing broad, relatively shallow basins, is approximated by this extension/subsidence mechanism.

Extension is assumed to be localized on graben-bounding faults in the second extension mechanism; for simplicity, the effects of crustal thinning by extension and the nature of the lower termination of the faults are not discussed at this point (Fig. 2b). More detailed analyses of this problem have been given elsewhere by Vening Meinesz (1950), Bott (1976), Bott and Mithen (1983), and others. To a first approximation, vertical movement, t, on these faults can be calculated simply from the extension across the faults, x'—x, and the dip, D, of the faults, and is given by

$$2t = (x'—x)\tan D$$

for a symmetric graben. For an extension of 10 km (similar to that reported for north-central New Mexico), vertical displacements of 8.7 to 13.7 km are calculated for faults dipping from 60 to 70°. For an asymmetric graben most vertical and horizontal movements occur on one side of the graben. This is a very efficient mechanism for producing deep basins with little extension, and we suggest that late Miocene—Pliocene Rio Grande rift extension is approximated by this mechanism. Total vertical displacements by this mechanism are limited by isostatic and energetic considerations not discussed here; however, in a more complete analysis of this problem, Bott (1976) and Bott and Mithen (1983) have calculated that with a reasonable stress field, sediment-filled grabens on the order of 5 km deep can be produced by this mechanism. Larger vertical displacements may occur if uplift of horst blocks is also considered. The net regional effect of this extension

mechanism is to cause regional subsidence because, as with the uniform extension mechanism, the buoyant crust is thinned. However, major horst and graben topography may be produced, rejuvenating the topography.

For simplicity, in the analyses of both extension/subsidence mechanisms we have ignored the effects of sediment loading in the depressions. This loading increases downwarp and basin depth. Complementary erosion of adjacent uplifts will result in further structural uplift of these ranges. It is not possible to explain the difference in extension/subsidence styles in the two extension events from the effects of sediment loading, because these effects are isostatic and modify, but do not change, the relative subsidence from the two mechanisms. We have chosen extreme mechanisms for extension/subsidence, and it is probable that neither extension event is completely represented by these extremes. By concentrating on these extremes, however, we attempt to determine the major factors controlling extensional style in the two events.

FACTORS CONTROLLING EXTENSIONAL STYLE

The basic difference between the two extreme extension/subsidence mechanisms presented above (Fig. 2) is the effective mechanical behavior of the crust. In the uniform-extension mechanism (Fig. 2a), the crust behaves as a plastic material; in the graben-forming mechanism (Fig. 2b), movement on faults indicates control by brittle deformation in at least the upper crust. We therefore seek the factors which control the mechanical strength and failure mechanism of the crust under extension.

Mechanisms of rock deformation are complex, but can be grouped into two basic types, brittle failure and ductile creep. Brittle failure applies to all types of shear motion confined to a discrete zone (i.e., a fault); ductile creep describes distributed solid-state deformation. If the brittle-failure strength of a rock is less than its ductile-creep strength, as stress is increased it will fracture. Conversely, if its ductile strength is less than its brittle strength, it will deform plastically as stress increases. Laboratory and field experiments have shown that the brittle-yield strength of the lithosphere is relatively independent of composition, temperature, and strain rate, and that it can be reasonably approximated as two linear functions of depth, one for compression and one for extension (e.g., Byerlee, 1978; Jamison and Cook, 1980; Lynch, 1983; McGarr, 1980; Stetsky, 1978). Ductile-creep strength depends upon a number of parameters, the primary ones being temperature, composition, and strain rate (e.g., Carter, 1976; Goetze and Brace, 1972; Lynch, 1983; Weertman and Weertman, 1975). In general, the ductile strength increases with increasing mafic-mineral content and strain rate, but decreases with increasing temperature (e.g., Smith and Bruhn, 1984).

In many areas of the Rio Grande rift the second extension event is superimposed on earlier extension; thus, to explain contrasting styles of extension in the same area at different times, a time-dependent parameter controlling crustal strength is required—temperature or strain rate. Strain rate is very difficult to constrain as at best we can only bracket the time period during which extension occurred. Ductile strength increases with increasing strain rate, causing the brittle–ductile transition to become deeper (e.g., see later, Fig. 4). Thus, if strain rate was the controlling parameter, the crust would be expected to deform in a more brittle style in the high-strain (high-strain rate?) extension event than in the later low-strain (low-strain rate?) event. However, as the converse was true, temperature was the more likely parameter controlling extensional style.

EVOLUTION OF THE GEOTHERM AND LITHOSPHERIC STRENGTH

Heat-flow data from northern New Mexico and southern Colorado (Edwards and others, 1978; Reiter and Mansure, 1983; Reiter and others, 1979; Clarkson and Reiter, this guidebook; Decker and others, this guidebook) provide a reasonable constraint on variations in the modern geotherm across the northern Rio Grande rift. Heat flow increases from about 70 mW m^{-2} in the southern San Juan Basin on the eastern margin of the Colorado Plateau to about 120 mW m^{-2} in the rift, then decreases to about 50 mW m^{-2} in the Great Plains to the east (Clarkson and Reiter, this guidebook). Higher heat-flow values are commonly associated with young volcanic fields on both sides of the rift. Geotherms predicted from these heat-flow values are shown in Figure 3. It is interesting to note that the modern geotherm estimated for the rift gives unrealistically high temperatures in the lower crust, suggesting that the thermal gradient decreases with depth and that there has been a significant component of heat transfer by magma intrusion into the lower crust during the past few m.y. associated with the young volcanic fields in this region (see also Lachenbruch and Sass, 1978; Reiter and Clarkson, 1983; Decker and others, this guidebook).

At present no data constrain the history of the geotherm in northern New Mexico, as the present geothermal activity masks earlier thermal events. However, the major Oligocene–early Miocene volcanic activity in north-central New Mexico makes it reasonable to assume that the

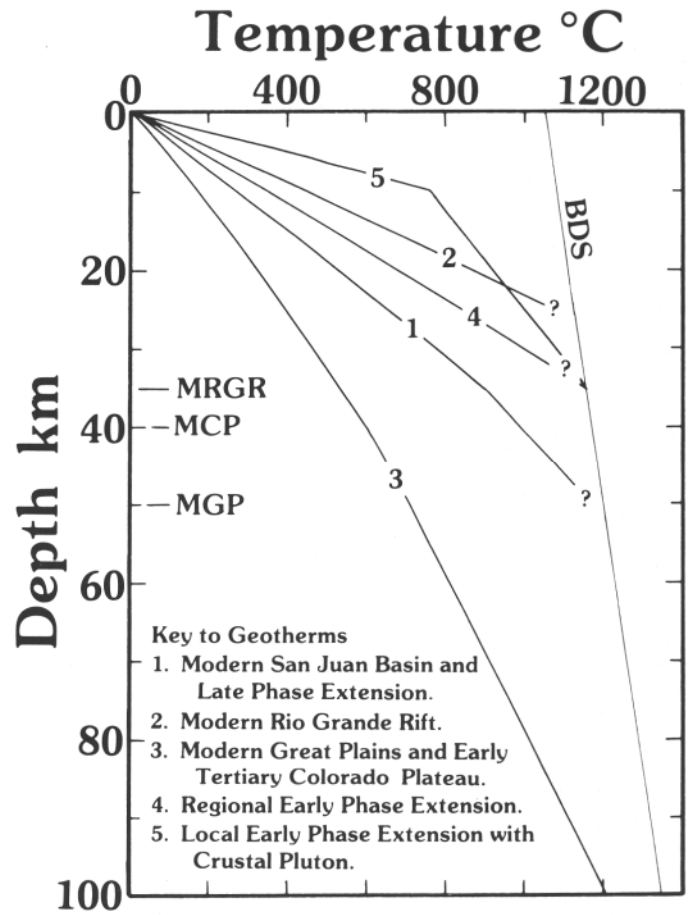

FIGURE 3. Assumed geotherms for northern New Mexico. Modern San Juan Basin, Rio Grande rift, and Great Plains geotherms (curves 1, 2, and 3) are based on surface heat-flow values of 70, 120, and 50 mW m^{-2}, respectively. Early-phase extension geotherms (curves 4 and 5) are based on the implication that crustal melting occurred during the later phases of Oligocene–early Miocene volcanism. Curve 1 (San Juan Basin) also represents the late-phase extension geotherm based on the calculation that surface heat flow would decrease from about 95 mW m^{-2} (curve 4) to 70 mW m^{-2} (curve 2) during 7 m.y. of cooling during the middle Miocene magmatic lull. Curve 3 (Great Plains) also represents the early Tertiary Colorado Plateau on the assumption that the plateau lithosphere was cool at this time. See text for further details of the assumptions for the geotherms. All curves are schematic especially at higher temperatures and do not accurately represent the transient effects of intrusions. However, the strength curves generated from these geotherms are not sensitive to the geotherms at high temperatures, and for the purposes of comparison of strength curves it is the relative levels of the geotherms that are of greatest importance. BDS is the basalt dry solidus (from Lachenbruch and Sass, 1978). MRGR, MCP, and MGP are modern Moho depths for the Rio Grande rift, Colorado Plateau, and Great Plains, respectively (from Cordell, 1978).

crust was heated during that event. Strontium-isotope data from volcanic rocks of this event in the southern Rio Grande rift (Seager and others, 1984) indicate crustal contamination of the magmas during the latter part of this event and suggest possible crustal melting. Further evidence for crustal melting is given by the abundance of mid-Tertiary silicic, alkalic, and rhyolitic volcanic rocks and associated granitic intrusions and calderas throughout the region. We therefore present two speculative geotherms for the rift area during the latter stages of Oligocene—early Miocene volcanism and the early phase of extension. The first geotherm is constrained to intersect the basalt dry solidus at the Moho (35 km), a lower thermal limit to the effects of intrusion of mantle-derived melts (curve 4, Fig. 3). The second geotherm has the same constraint at the Moho, but it is also constrained to intersect a temperature of 760° at 10 km (the tonalite solidus; Wyllie, 1977) to simulate the effect of a major upper-crust pluton emplacement (curve 5, Fig. 3).

To estimate the geotherm at the time of late-phase extension, we deduce from the middle Miocene lull in volcanic activity (Chapin and Seager, 1975; Baldridge and others, 1980) that the lithosphere was probably cooling during this interval. Assuming 7 m.y. cooling of the geotherm (see Vitorello and Pollack, 1980) represented by curve 4 in Figure 3, we estimate a reasonable decrease in surface heat flow from about 95 to 70 mW m^{-2}. As a result, the geotherm at the start of Rio Grande rift extension would be very similar to the modern southern San Juan Basin geotherm (curve 1, Fig. 3). A slightly higher geotherm would be predicted by cooling from the hot geotherm simulating crustal pluton emplacement (curve 5, Fig. 3). However, since the pluton emplacement occurred as local events scattered through the major volcanic phase, we consider the hot geotherm without the effect of a crustal pluton (curve 4, Fig. 3) more representative of the regional geotherm at the start of cooling. Thus, we have estimates of the geotherm at the start of both extension events.

Lithospheric-strength curves for northern New Mexico for the geotherms shown in Figure 3 have been calculated using approximations to extensional brittle-failure and ductile-creep data given by Lynch (1983) (Figs. 4, 5). For these calculations we made the common assumption that the upper part of the crust was dominated by a silicic rheology and the lower part by a mafic rheology. For our purposes of comparison of strength curves, the details of the assumed upper—lower crust division are unimportant. Figure 4 shows the strength curves calculated for the low heat-flow Great Plains and shows the basic features of the strength curves. Ignoring any shallow compositional variations, the strength increases with depth from the surface in a brittle zone in silicic upper crust until a temperature of about 250°C is reached when deformation changes to ductile creep and the strength rapidly decreases with depth. At the silicic—mafic interface strength rapidly increases again in a second zone of brittle strength and continues to increase further until a temperature of about 400°C is reached; then the strength rapidly decreases again with depth in a zone of ductile deformation. This pattern is repeated below the Moho with a brittle—ductile transition in the ultramafic rocks occurring at about 850°C. These transition temperatures and the heavy curve in Figure 4 are appropriate to a strain rate of 10^{-15}s ' (approximately 3%/m.y.). Also shown in Figure 4 are the ductile-strength curves for strain rates of 10^{-}" and 10^{-16} s^{-} which probably encompass the likely strain rates of Cenozoic extension in New Mexico. With these different strain rates the details of the strength curve change, but the basic form is essentially the same. All further comparisons are made using strength curves generated assuming a strain rate of 10^{-15} s^{-}

Strength curves generated using the two hypothetical early extension-phase geotherms (curves 4 and 5, Fig. 3) are shown in Figure 5a. High temperatures in the lower crust and upper mantle predicted by these geotherms result in no significant strength in the mafic and ultramafic layers, and strength is concentrated into the silicic upper crust. The only significant difference between the two curves is the depth of the brittle—ductile transition, a shallower transition being predicted for the hotter, pluton-heated crust. The strength curve predicted for the late extension-phase geotherm (curve 1, Fig. 3) is shown in Figure 5b. Cooler temperatures predicted by this geotherm result in an increase in the brittle—ductile transition depth, a small zone of mafic ductile strength in the lower crust, and a significant zone of ultramafic ductile strength

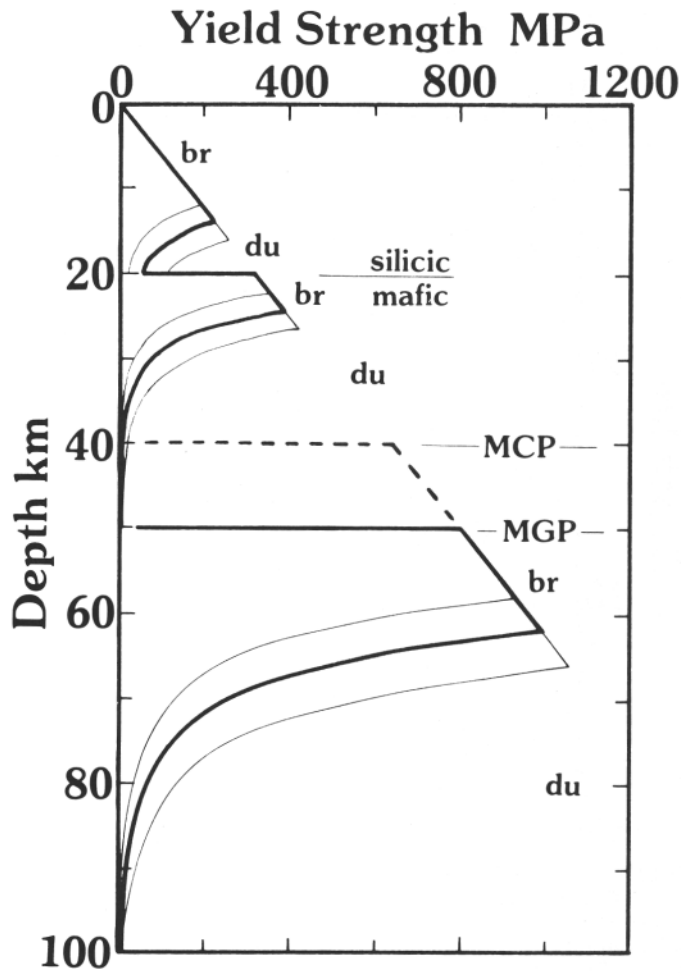

FIGURE 4. Calculated lithospheric-strength curve for the Great Plains (heavy curve) assuming a 20-km silicic upper crust and 30-km mafic lower crust and a strain rate of 10^{-15} s^{-1} (approximately 3% m.y.$^{-1}$). Layers of brittle and ductile strength are indicated by **br** and **du,** respectively. Modifications to the ductile sections of the strength curve assuming strain rates of 10^{-16} and 10^{-14} s^{-1} are shown by the fine lines above and below the heavy lines, respectively. Dashed lines show additional strength predicted for the early Tertiary Colorado Plateau relative to the modern Great Plains strength curve (assuming the same geotherm for both) by virtue of its thinner crust prior to Cenozoic heating and uplift. Depths to Great Plains and Colorado Plateau Mohos are indicated by MGP and MCP, respectively (from Cordell, 1978).

in the uppermost mantle. Obviously, just as the geotherm for this period was transitional between the hot Oligocene—early Miocene geotherm and the modern Great Plains geotherm, its predicted strength curve is also transitional between the curves shown in Figures 5a and 4. The curve in Figure 5b is probably also representative of the modern southern San Juan Basin lithosphere.

The first obvious result of a comparison of the strength curves in Figures 4 and 5 is that extension occurred where the crust (lithosphere) was weakest. It has been suggested that the lithosphere of the Colorado Plateau has been heating up during the latter half of the Cenozoic (e.g., Thompson and Zoback, 1979; Bodell and Chapman, 1982). Thus, during the early extension phase, and possibly during late-phase extension, the strength curve of the Plateau may have been similar to the modern Great Plains curve (Fig. 4), but is now weakening due to late Cenozoic heating.

The strength curves predicted for the crust during the first stage of extension strongly suggest that extension of the crust would have been dominated by ductile deformation. Brittle failure is predicted in the uppermost crust, but a decollement at a shallow depth, probably close

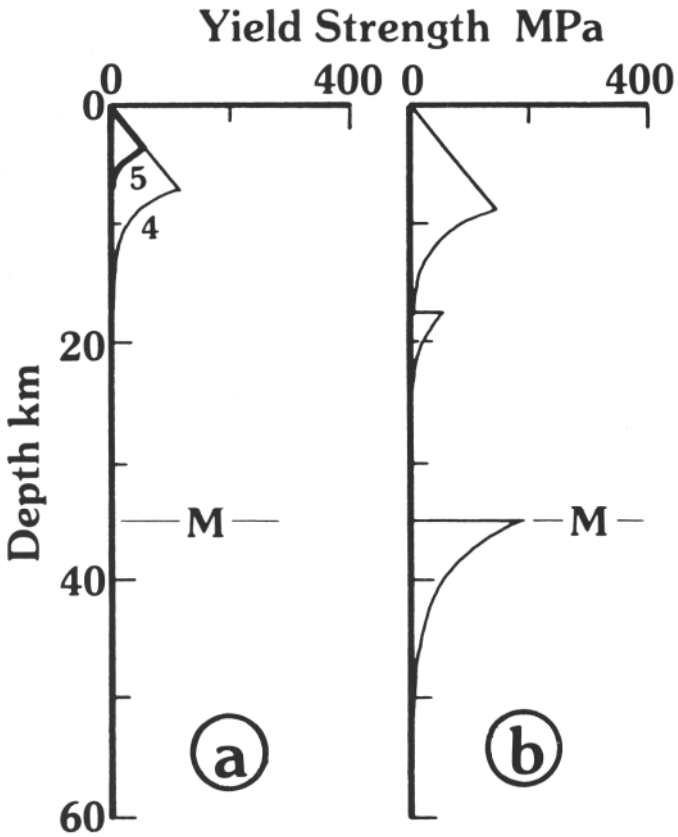

FIGURE 5. Calculated strength curves for the Rio Grande rift lithosphere during the two Cenozoic extension events assuming a strain rate of 10^{-15} s^{-1} and a 17.5-km silicic upper crust overlying a 17.5-km mafic lower crust. **a,** Strength during early-phase extension: curve 4 predicted for normal hot crust during this event (predicted from geotherm 4, Fig. 3); curve 5 predicted for hot crust with upper crustal pluton (predicted from geotherm 5, Fig. 3). **b,** Strength during Rio Grande rift extension (predicted from geotherm 1, Fig. 3). Moho depth is indicated by M (from Cordell, 1978).

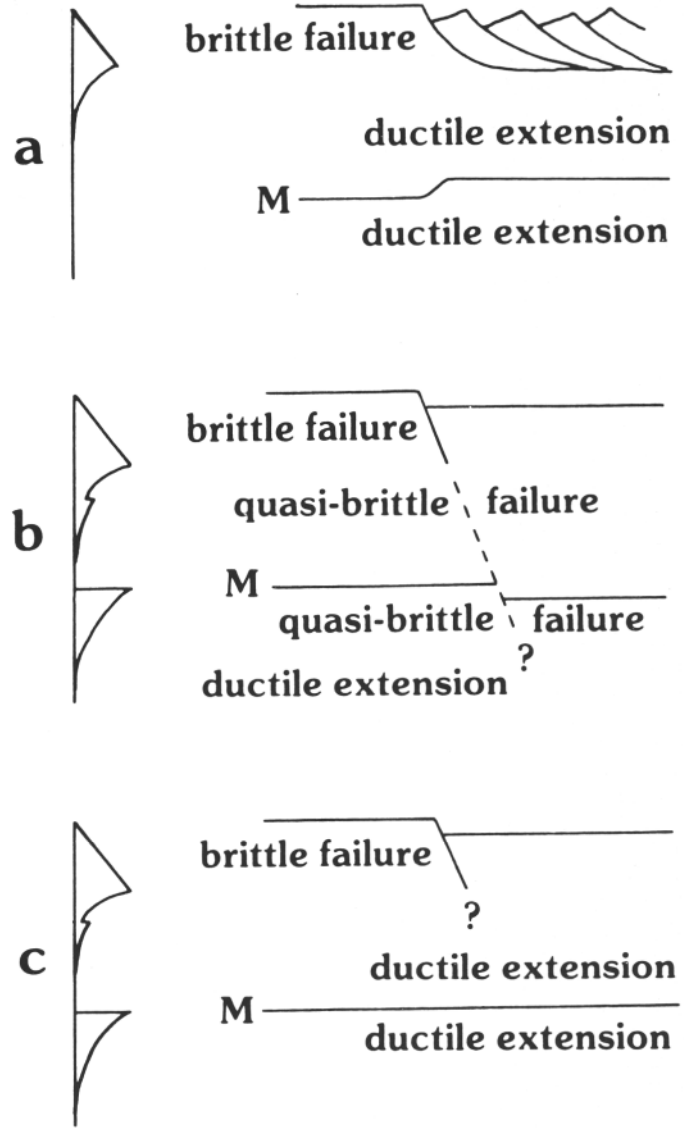

FIGURE 6. Relationships between strength curves (left) and styles of extensional tectonics (right). **a,** Early-phase extension. **b** and **c,** Late-phase extension. Not to scale. See text for explanation. Upwarp of the Moho (M) is shown schematically in a. Only the direct effects of faulting on the Moho are shown in b and c; crustal thinning associated with extension is not shown in b and c.

to the brittle—ductile transition (about 7 km deep or less), would allow strong rotation of locally pervasive brittle fault blocks either on listric normal faults (e.g., Eaton, 1982) or domino-style faults (e.g., Chamberlin, 1983). This style of extension and the controlling strength curve are shown in Figure 6a. Large rotations during this event were made possible by high local strain, which in turn may have been localized by very weak (hot) columns of lithosphere.

Deformation style during the late-phase extension is more difficult to predict from the form of the strength curve. The only predicted brittle—ductile transition is still in the upper crust, but strength in the uppermost mantle could have limited strain and prevented the formation of a shallow decollement. We suggest that perhaps faulting extended right through the crust into the upper mantle with quasi-brittle failure in the lower crust or upper mantle (Fig. 6b), in a manner similar to that described by Vening Meinesz (1950) for graben formation. Alternatively, faulting was truncated by ductile extension in the lower crust as suggested by Bott (1976). However, ductile strength in the uppermost mantle prevented any significant intracrustal decoupling, which in turn prevented any significant rotation of upper crustal blocks in this event (Fig. 6c). Ductile flow in the lower crust and upper mantle after faulting would probably result in both fault-controlled mechanisms, giving a final crustal section similar to that shown in Figure 6c.

DISCUSSION AND CONCLUDING REMARKS

In our simplified analysis of extensional style associated with Rio Grande rift development it has been necessary to generalize geologic events and geotherm evolution. There are obviously many examples of local deformation which do not concur with our simplified models, but we hope that we have identified the basic factor, temperature change, which has controlled the change in extensional style between early and late phases of extension. Local departures from our models may be due to spatial variations in the geotherm, or local compositional or preexisting structural controls of upper-crust faulting. We have no direct evidence to support our speculation on the evolution of the geotherm during the latter half of the Cenozoic, but our models are consistent with the volcanic history of the region. A somewhat better constraint is available in southwestern New Mexico where heat-flow data in regions affected by Oligocene volcanism and early-phase extension, but not affected by young (less than 10 m.y.) volcanism, are in reasonable agreement with the cooling geotherm model (Morgan and Seager, 1983). We hope that new evidence of the paleogeotherm in north-central New Mexico may be gathered to support or refute our models.

Our models of extension associated with the Rio Grande rift are independent of, and ignore, the forces that cause the extension. We simply assume that an extensional-stress field was active only during the two phases of extension. Stress fields locally generated by topog-

raphy and lithospheric inhomogeneities (e.g., Bott, 1981), and additional weakening of the lithosphere by heating of the crust during plutonic activity may explain the variation in ages of early extension along the rift and the close association of early-phase extension and volcanism in some areas (e.g., Chamberlin, 1983; Lipman, 1981). Considerable regional control of early-phase extension is evident, however, from the similar timing and alignment of extension axes of this phase throughout the western U.S. (Zoback and others, 1981).

If our analysis of geotherm evolution in north-central New Mexico is correct, our models also have important implications for evolution of regional topography. Deposition of the marine Mancos Shale over much of the region indicates a regional surface altitude close to the sea level during Late Cretaceous prior to Laramide deformation. Regional altitudes are now in the range of 1.5-2.5 km, with local elevations in excess of 2.5 km (Cordell, 1978, fig. 2). Epeirogenic uplifts of up to 3 km can be explained in terms of lithospheric heating, thinning, and expansion (Morgan, 1983), and this has been suggested as the dominant mechanism of Cenozoic uplift of the Colorado Plateau (Bodell and Chapman, 1982). Tectonic or magmatic thickening of the crust also results in surface uplift by adding more buoyant low-density material to the lithosphere.

Uplift during Laramide deformation was probably primarily a result of crustal thickening by folding and overthrusting. The lack of any major magmatic activity associated with this event suggests that thermal uplift either did not occur or was minor. Heating of the lithosphere during major Oligocene-early Miocene volcanic activity requires thermal uplift during this event, possibly augmented, at least locally, by magmatic crustal thickening. Evidence for this phase of uplift is given by Axelrod and Bailey (1976) and Elston (1984). Both extension events suggest regional crustal thinning and thus subsidence unless thinning was compensated by the addition of magmas to the crust (e.g., Lachenbruch and Sass, 1978). There is no evidence to indicate regional subsidence during extension at present. Block-faulting during late-phase extension resulted in both local uplift and subsidence and the generation of major topography.

Several authors have suggested significant recent (less than 10 m.y.) uplift of the Rio Grande rift (e.g., Axelrod and Bailey, 1976; Scott, 1975; Seager and others, 1984; Taylor, 1975). We estimate that reheating of the lithosphere to the modern geotherm after the middle Miocene magmatic lull (heating from curve 1 to curve 2 in Fig. 3) could cause about 500 m of uplift, based upon the thermal-uplift models of Morgan (1983). If a significantly more recent uplift has occurred, we suggest that magmatic thickening of the crust may be responsible. Axelrod and Bailey (1976) suggest 1200 m of recent uplift, which would require approximately 5 km of crustal thickening in addition to lithospheric reheating, assuming mean crustal and mantle densities of 2.8 and 3.25 Mg m^{-3}, respectively. A modern magma body or bodies in the Socorro area of the Rio Grande rift (e.g., Sanford, 1983) may be a current example of this magmatic crustal thickening. Transient models of heat-flow data in southern New Mexico (Cook and others, 1978) and in Colorado (Decker and others, this guidebook) also suggest significant recent crustal intrusions. However, contemporaneous uplift of the Colorado Plateau (e.g., Lucchitta, 1979) and the western Great Plains (e.g., see Axelrod and Bailey, 1976) suggests that recent uplift of the Rio Grande rift may not be a local event, and clearly this problem requires further study.

Northern New Mexico shares its two-phase Cenozoic extension history with other areas of the Rio Grande rift and much of the Basin and Range province (e.g., Eaton, 1982; Zoback and others, 1981; Golombek and others, 1983). Possible association of a changing geotherm with changing extensional style has also been suggested for some of these other areas (e.g., Lucchitta and Suneson, 1982; Morgan and Seager, 1983) If this association proves to be correct, we hope that we are one step closer to understanding the complex tectonic history of the western U.S.

ACKNOWLEDGMENTS

Many of the concepts developed in this study have been suggested by previous students of Basin and Range and Rio Grande rift geology; in particular, we have benefited from discussions with Bill Seager and No Lucchitta. We are very grateful to Chuck Chapin and Art Lachenbruch for thoughtful and constructive reviews of a draft of this manuscript. P.M. made his contribution to this study while at the Lunar and Planetary Institute, which is operated by the Universities Space Research Association under contract no. NASW-3389 from the National Aeronautics and Space Administration. Work by M.P.G. on this study was carried out at the Jet Propulsion Laboratory, California Institute of Technology, under contract no. NAS7-l00 from the National Aeronautics and Space Administration. This is LPI contribution no. 532.

REFERENCES

Aubele, J. C., 1979, The Cerros del Rio volcanic field: New Mexico Geological Society, Guidebook 30, pp. 243-252.

Axelrod, D. 1., and Bailey, H. P., 1976, Tertiary vegetation, climate, and altitude of the Rio Grande depression, New Mexico-Colorado: Paleobiology, v. 2, pp. 235-254.

Bachman, G. 0., and Mehnert, H. H., 1978, New K Ar dates and the late Pliocene to Holocene geomorphic history of the central Rio Grande region New Mexico: Geological Society of America, Bulletin, v. 89, pp. 283-292.

Baldridge, W. S., Damon, P. E., Shafiqullah, M., and others, 1980, Evolution of the central Rio Grande rift, New Mexico: new potassium-argon ages: Earth and Planetary Science Letters, v. 51, pp. 309-321.

Baltz, E. H., 1978, Resume of Rio Grande depression in north-central New Mexico: New Mexico Bureau of Mines and Mineral Resources, Circular 163, pp. 210-228.

Birch, F. S., 1982, Gravity models of the Albuquerque Basin, Rio Grande rift, New Mexico: Geophysics, v. 47, pp. 1185-1197.

Bodell, J. M., and Chapman, D. S., 1982, Heat flow in the north-central Colorado Plateau: Journal of Geophysical Research, v. 87, pp. 2869-2884.

Bott, M. H. P., 1976, Formation of sedimentary basins of graben type by extension of the continental crust: Tectonophysics, v. 36, pp. 77-86.

__, 1981, Crustal doming and the mechanism of continental rifting: Tectonophysics, v. 73, pp. 1-8.

_____ , and Mithen, D. P., 1983, Mechanism of graben formation—the wedge subsidence hypothesis: Tectonophysics, v. 94, pp. 11-22.

Brocher, T. M., 1981, Shallow velocity structure of the Rio Grande rift north of Socorro, New Mexico: Journal of Geophysical Research, v. 86, pp. 4960-4970.

Brown, L. D., Chapin, C. E., Sanford, A. R., and others, 1980, Deep structure of the Rio Grande rift from seismic reflection profiling: Journal of Geophysical Research, v. 85, pp. 4773-4800.

Byerlee, J. D., 1978, Friction of rocks: Pure and Applied Geophysics, v. 116, pp. 615-626.

Cape, C. D., McGeary, S., and Thompson, G. A., 1983, Cenozoic normal faulting and the shallow structure of the Rio Grande rift near Socorro, New Mexico: Geological Society of America, Bulletin, v. 94, pp. 3-14.

Carter, N. L., 1976, Steady state flow of rocks: Reviews of Geophysics and Space Physics, v. 14, pp. 301-360.

Chamberlin, R. M., 1983, Cenozoic domino-style crustal extension in the Lemitar Mountains, New Mexico: a summary: New Mexico Geological Society, Guidebook 34, pp. 111-118.

Chapin, C. E., 1979, Evolution of the Rio Grande rift—a summary; *in* Riecker, R. E. (ed.), Rio Grande rift—tectonics and magmatism: American Geophysical Union, Washington, D.C., pp. 1-5.

__, and Cater, S. M., 1981, Eocene tectonics and sedimentation in the Colorado Plateau-Rocky Mountain area: Arizona Geological Society Digest, v. XIV, pp. 173-198.

__, and Seager, W. R., 1975, Evolution of the Rio Grande rift in the Socorro and Las Cruces areas: New Mexico Geological Society, Guidebook 26, pp.297-321.

Cook, F. A., Decker, E. R., and Smithson, S. B., 1978, Preliminary transient heat flow model of the Rio Grande rift in southern New Mexico: Earth and Planetary Science Letters, v. 40, pp. 316-326.

Cordell, L., 1978, Regional geophysical setting of the Rio Grande rift: Geological Society of America, Bulletin, v. 89, pp. 1073-1090.

__, 1982, Extension in the Rio Grande rift: Journal of Geophysical Research, v. 87, pp. 8561-8569.

Doell, R. R., Dalrymple, G. B., Smith, R. L., and others, 1968, Paleomagnetism, potassium-argon ages, and geology of rhyolites and associated rocks of the Valles caldera, New Mexico: Geological Society of America, Memoir 116, pp. 211-248.

Eaton, G. P., 1982, The Basin and Range province: origin and tectonic significance: Annual Reviews of Earth and Planetary Science, v. 10, pp. 409-440.

Edwards, C. L., Reiter, M., Shearer, C., and others, 1978, Terrestrial heat flow and crustal radioactivity in northeastern New Mexico and southeastern Colorado: Geological Society of America, Bulletin, v. 89, pp. 1341-1350.

Elston, W. E., 1984, Subduction of young oceanic lithosphere and extensional orogeny in southwestern North America during mid-Tertiary time: Tectonics, v. 3, pp. 229-250.

Gardner, J. N., 1983, Tectonic controls of petrogenesis, Jemez volcanic field, New Mexico (abstract): Geological Society of America, Abstracts with Programs, v. 15, p. 380.

Goetze, C., and Brace, W. F., 1972, Laboratory observations of high-temperature rheology of rocks. Tectonophysics, v. 13, pp. 583-600.

Golombek, M. P., 1981, Geometry and rate of extension across the Pajarito fault zone, Espanola Basin, Rio Grande rift, northern New Mexico: Geology, v. 9, pp. 21-24.

__, McGill, G. E., and Brown, L., 1983, Tectonic and geologic evolution of the Espanola Basin, Rio Grande rift: structure, rate of extension, and relation to the state of stress in the western United States: Tectonophysics, v. 94, pp. 483-507.

Jamison, D. B., and Cook, N. G. W., 1980, Note on measured values for the state of stress in the Earth's crust: Journal of Geophysical Research, v. 85, pp. 1833-1838.

Jurdy, D. M., and Brocher, T. M., 1980, Shallow velocity model of the Rio Grande rift near Socorro, New Mexico: Geology, v. 8, pp. 185-189.

Kautz, P. F., Ingersoll, R. V., Baldridge, W. S., and others, 1981, Geology of the Espinaso Formation (Oligocene), north-central New Mexico: summary: Geological Society of America, Bulletin, pt. I, v. 92, pp. 980-983.

Kelley, V. C., 1977, Geology of the Albuquerque Basin: New Mexico Bureau of Mines and Mineral Resources, Memoir 33, 59 pp.

Kudo, A. M., 1982, Rift volcanics of the Albuquerque Basin: overview with some new data: New Mexico Geological Society, Guidebook 33, pp. 285-289.

Lachenbruch, A. H., and Sass, J. H., 1978, Models of an extending lithosphere and heat flow in the Basin and Range province; *in* Smith, R. B., and Eaton, G. P. (eds.), Cenozoic tectonics and regional geophysics of the Western Cordillera: Geological Society of America, Memoir 152, pp. 209-250.

Lipman, P. W., 1981, Volcano-tectonic setting of Tertiary ore deposits, southern Rocky Mountains: Arizona Geological Society Digest, v. XIV, pp. 199-213.

__, and Mehnert, H. H., 1979, The Taos volcanic field, northern Rio Grande rift, New Mexico; *in* Riecker, R. E. (ed.), Rio Grande rift-tectonics and magmatism: American Geophysical Union, Washington, D.C., pp. 289-311.

Lucchitta, I., 1979, Late Cenozoic uplift of the southwestern Colorado Plateau and adjacent lower Colorado River region: Tectonophysics, v. 61, pp. 63-95.

__, and Suneson, N., 1982, Relationships of core complexes, Cenozoic extensional tectonism, and the stable craton near the Colorado Plateau margin in western Arizona (abstract): Geological Society of America, Abstracts with Programs, v. 14, p. 182.

Lynch, H. D., 1983, Numerical models of the formation of continental rifts by processes of lithospheric necking: Ph.D. dissertation, New Mexico State University, Las Cruces, 290 pp.

Manley, K., and Mehnert, H. H., 1981, New K-Ar ages of Miocene and Pliocene volcanic rocks in northwestern Espanola Basin and their relationships to the history of the Rio Grande rift: Isochron/West, no. 30, pp. 5-8.

McGarr, A., 1980, Some constraints on levels of shear stress in the crust from observations and theory: Journal of Geophysical Research, v. 85, pp. 6231-6238.

McKenzie, D., 1978, Some remarks on the development of sedimentary basins: Earth and Planetary Science Letters, v. 40, pp. 25-32.

Morgan, P., 1983, Constraints on rift thermal processes from heat flow and uplift: Tectonophysics, v. 94, pp. 277-298.

_, and Seager, W. R., 1983, Thermal, mechanical and tectonic evolution of the southern Rio Grande rift (abstract): Geological Society of America, Abstracts with Programs, v. 15, p. 320.

Osbum, G. R., and Chapin, C. E., 1983, Ash-flow tuffs and cauldrons in the northeast Mogollon-Datil volcanic field: a summary: New Mexico Geological Society, Guidebook 34, pp. 197-204.

Ramberg, I. B., and Morgan, P., 1984, Physical characteristics and evolutionary trends of continental rifts: *in* Proceedings of the 27th International Geological Congress: VNU Science Press BV, Utrecht, in press.

Reiter, M., and Clarkson, G., 1983, Geothermal studies in the San Juan Basin and the Four Corners area of the Colorado Plateau II. Steady-state models of the thermal source of the San Juan volcanic field: Tectonophysics, v. 91, pp. 253-269.

__, and Mansure, A. J., 1983, Geothermal studies in the San Juan Basin and the Four Corners area of the Colorado Plateau I. Terrestrial heat flow measurements: Tectonophysics, v. 91, pp. 233-251.

, and Shearer, C., 1979, Geothermal characteristics of the Rio Grande rift within the southern Rocky Mountain complex; *in* Riecker, R. E. (ed.), Rio Grande rift-tectonics and magmatism: American Geophysical Union, Washington, D.C., pp. 253-267.

Rhoades, S. M., and Callender, J. F., 1983, Evidence for low-angle faulting along western margin of the Sandia uplift, Rio Grande rift, New Mexico (abstract): Geological Society of America, Abstracts with Programs, v. 15 p. 322.

Sanford, A., 1983, Magma bodies in the Rio Grande rift in central New Mexico: New Mexico Geological Society, Guidebook 34, pp.123-125.

Scott, G. R., 1975, Cenozoic surfaces and deposits in the southern Rocky Mountains; *in* Curtis, B. F. (ed.), Cenozoic history of the southern Rocky Mountains: Geological Society of America, Memoir 144, pp. 227-248.

Seager, W. R., Shafiqullah, M., Hawley, J. W., and others, 1984, New K-Ar dates from basalts and the evolution of the southern Rio Grande rift: Geological Society of America, v. 95, pp. 87-99.

Smith, R. B., and Bruhn, R. L., 1984, Intraplate extensional tectonics of the eastern Basin-Range: inferences on structural style from seismic data, regional tectonics and thermal-mechanical models of brittle/ductile deformation: Journal of Geophysical Research, v. 89, in press.

Stearns, C. E., 1953a, Tertiary geology of the Galisteo-Tonque area, New Mexico: Geological Society of America, Bulletin, v. 64, pp. 459-508.

__, 1953b, Early Tertiary volcanism in the Galisteo-Tonque area, north-central New Mexico: American Journal of Science, v. 251, pp. 415-452.

Stetsky, R. M., 1978, Rock friction-the effect of confining pressure, temperature, and pore pressure: Pure and Applied Geophysics, v. 116, pp. 690-704.

Taylor, B. B., 1975, Neogene tectonism in south-central Colorado; *in* Curtis, B. F. (ed.), Cenozoic history of the southern Rocky Mountains: Geological Society of America, Memoir 144, pp. 211-226.

Thompson, G. A., and Zoback, M. L., 1979, Regional geophysics of the Colorado Plateau: Tectonophysics, v. 61, pp. 149-181.

Tweto, 0., 1979, The Rio Grande rift system in Colorado: *in* Riecker, R. E. (ed.), Rio Grande rift-tectonics and magmatism: American Geophysical Union, Washington, D.C., pp. 35-56.

Vening Meinesz, F. A., 1950, Les grabens africains, resultat de compression ou de tension dans la crane terrestre?: Institut Royale Coloniale Beige, Bulletin, v. 21, pp. 539-552.

Vitorello, I., and Pollack, H. N., 1980, On the variation of continental heat flow with age, and the thermal evolution of the continents: Journal of Geophysical Research, v. 85, pp. 983-995.

Weertman, J., and Weertman, J. R., 1975, High temperature creep of rock, and mantle viscosity: Annual Reviews of Earth and Planetary Science, v. 3, pp. 293-315.

Woodward, L. A., 1977, Rate of crustal extension across the Rio Grande rift near Albuquerque, New Mexico: Geology, v. 5, pp. 269-272.

Wyllie, P. J., 1977, Crustal anatexis: an experimental review: Tectonophysics, v. 43, pp. 41-71.

Zoback, M. L., Anderson, R. E., and Thompson, G. A., 1981, Cainozoic evolution of the state of stress and style of tectonism of the Basin and Range province of the western United States: Royal Society of London, Philosophical Transactions (A), v. 300, pp. 407-434.

Taos Plaza, northwest corner, August 1933. Photo by Charles Lord.